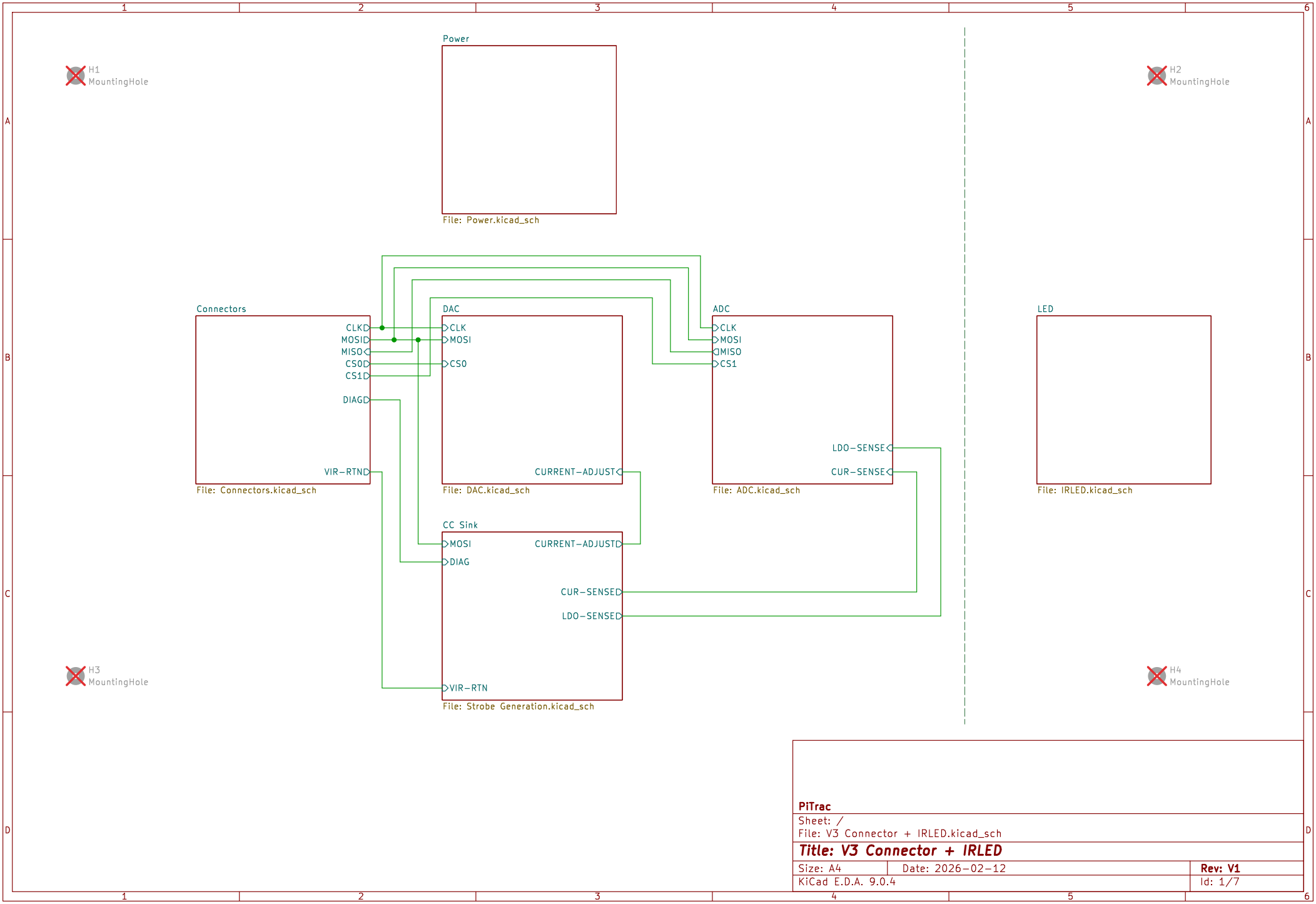

PiTrac

Sheet: /
File: V3 Connector + IRLED.kicad_sch

Title: V3 Connector + IRLED

Size: A4	Date: 2026-02-12	**Rev: V1**
KiCad E.D.A. 9.0.4		Id: 1/7

Power Input
Screw Terminal 5V @ 5.1A+

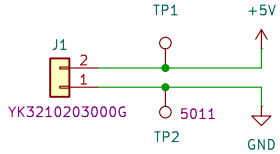

Raspberry Pi5 Power Only
USB-C 5V @ 5A

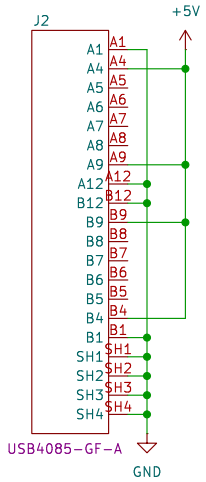

SPI & GPIO
7-pin 100mil

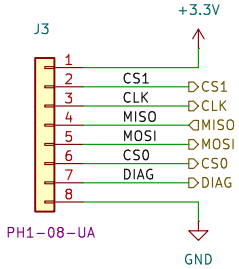

MOSI is STROBE

Strobe Output
Screw Terminal 36V @ 6 - 15A

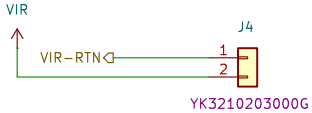

Raspberry Pi5 Power Only
USB-C 5V @ 5A

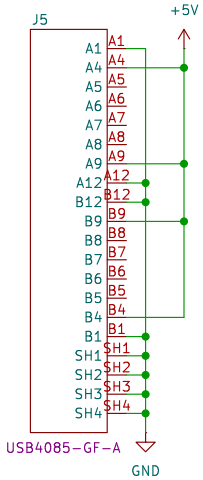

LED Strip (Optional)
USB-A 5V

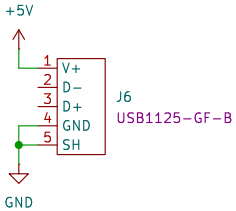

PiTrac

Sheet: /Connectors/
File: Connectors.kicad_sch

Title: V3 Connector + IRLED

Size: A	Date: 2026-02-12	**Rev: V1**
KiCad E.D.A. 9.0.4		Id: 2/7

36V Boost Converter @ 0.1A

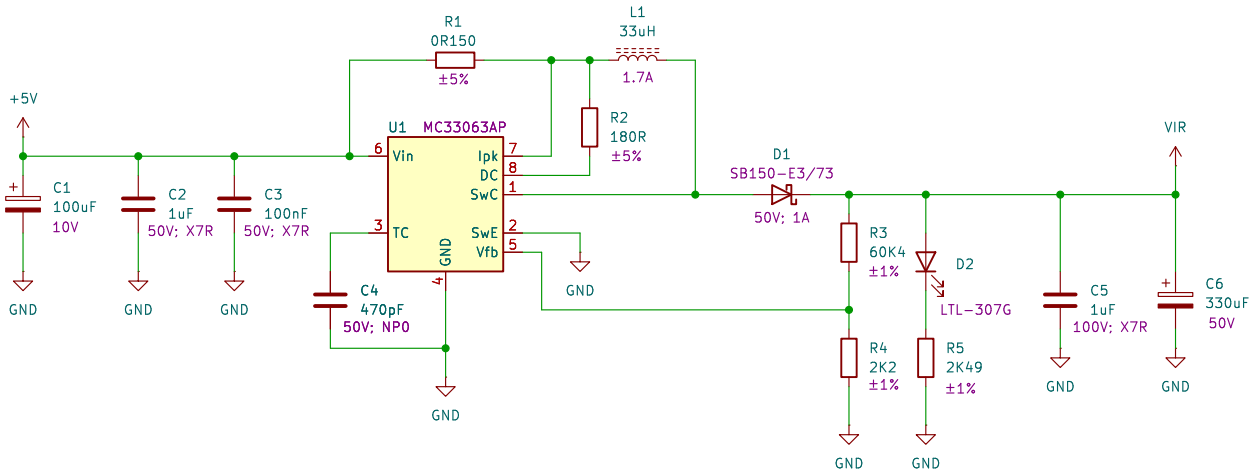

PiTrac

Sheet: /Power/
File: Power.kicad_sch

Title: V3 Connector + IRLED

Size: A4	Date: 2026-02-12	**Rev: V1**
KiCad E.D.A. 9.0.4		Id: 3/7

Adjustable Constant Current Sink

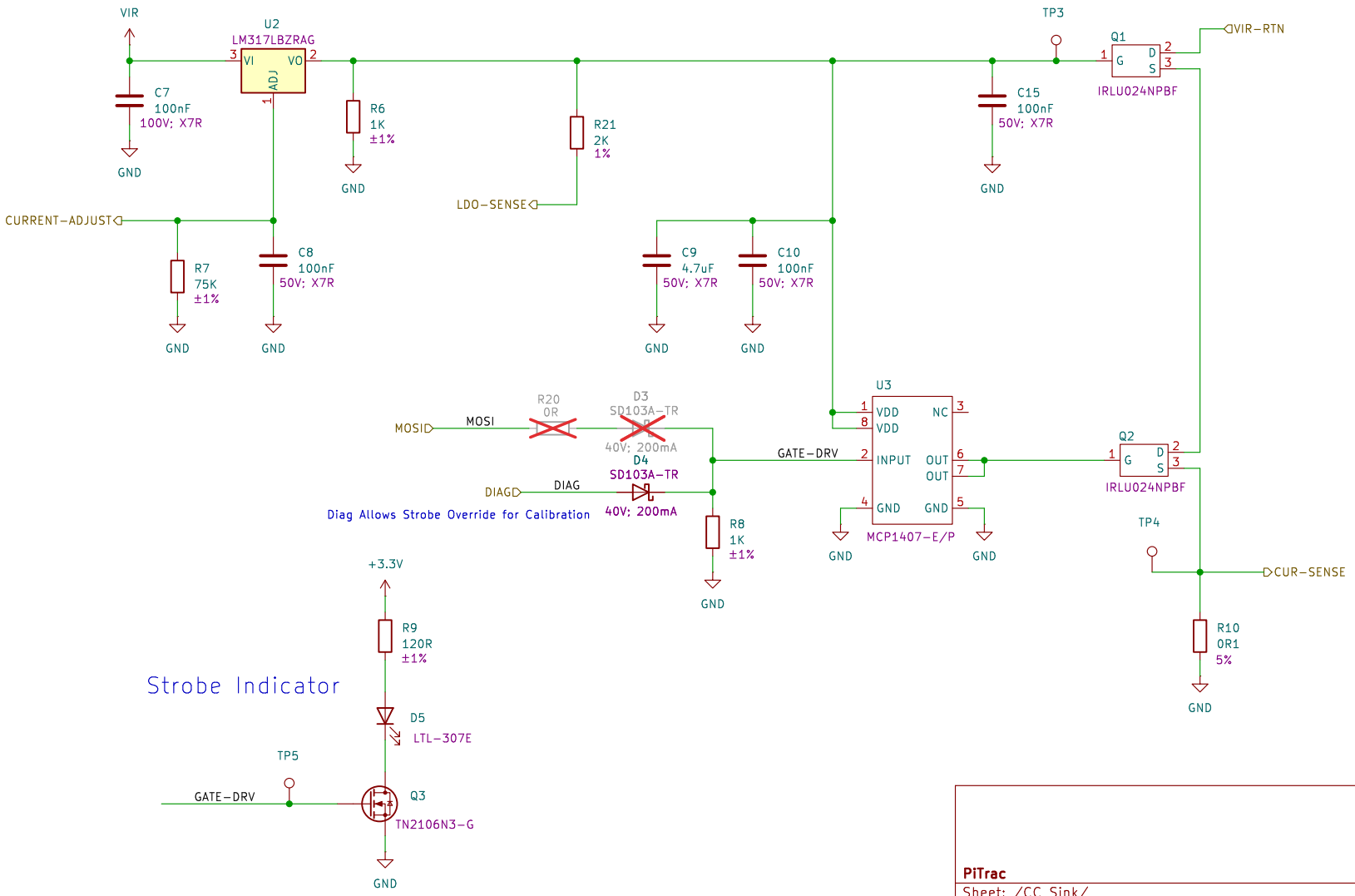

Strobe Indicator

PiTrac		
Sheet: /CC Sink/		
File: Strobe Generation.kicad_sch		
Title: V3 Connector + IRLED		
Size: A4	Date: 2026-02-12	**Rev: V1**
KiCad E.D.A. 9.0.4		Id: 4/7

8-bit DAC w/ Ext or Int Ref

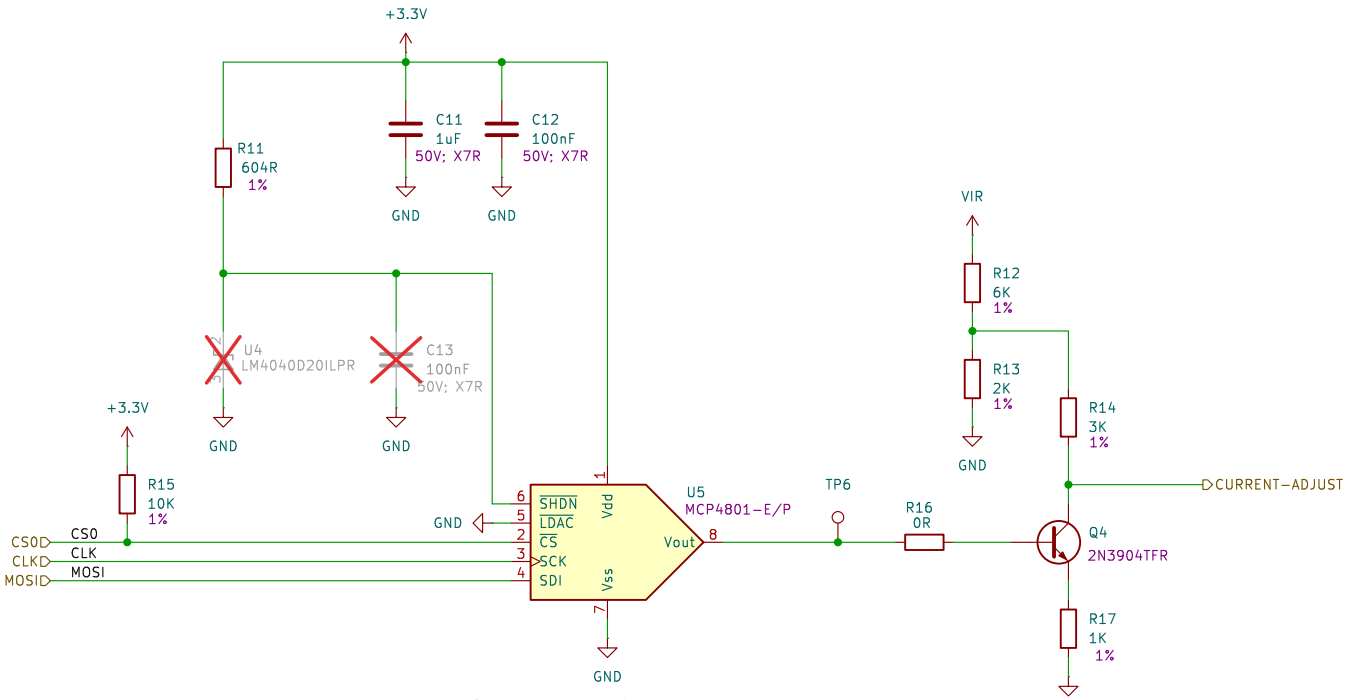

Current Adjust :
Control Range : 0.72 – 0.93V
Code Range : 5A – 74h
On Voltage : 4.5 – 8V
Voltage Resolution : ~135mV/count
Current Resolution : ~0.38A

PiTrac		
Sheet: /DAC/ File: DAC.kicad_sch		
Title: V3 Connector + IRLED		
Size: A4	Date: 2026-02-12	**Rev: V1**
KiCad E.D.A. 9.0.4		Id: 5/7

12-Bit ADC

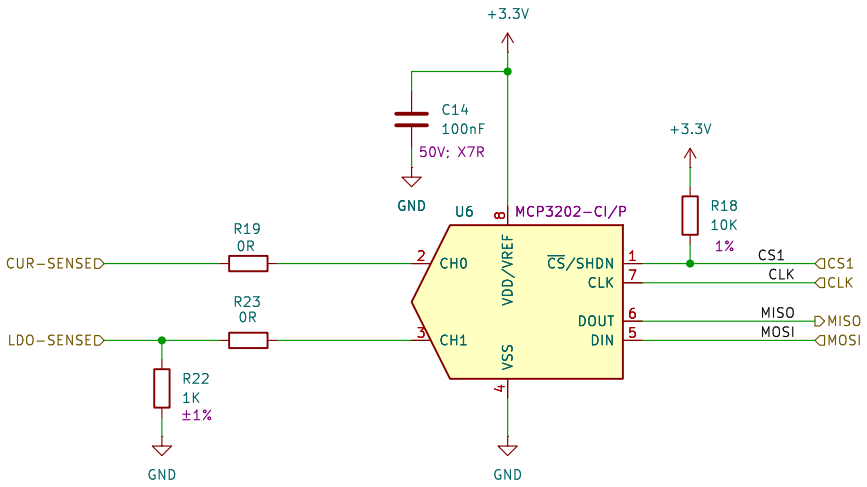

Cur-Sense :
Voltage Resolution : ~800uV/count
Current = Voltage / 0.1
On Current : 5.5 - 15A
On Counts : 687 - 1862
Current Resolution : ~8mA/count

LDO-Sense :
Voltage Range : 1.5 - 2.6V

PiTrac		
Sheet: /ADC/ File: ADC.kicad_sch		
Title: V3 Connector + IRLED		
Size: A4	Date: 2026-02-12	**Rev: V1**
KiCad E.D.A. 9.0.4		Id: 6/7

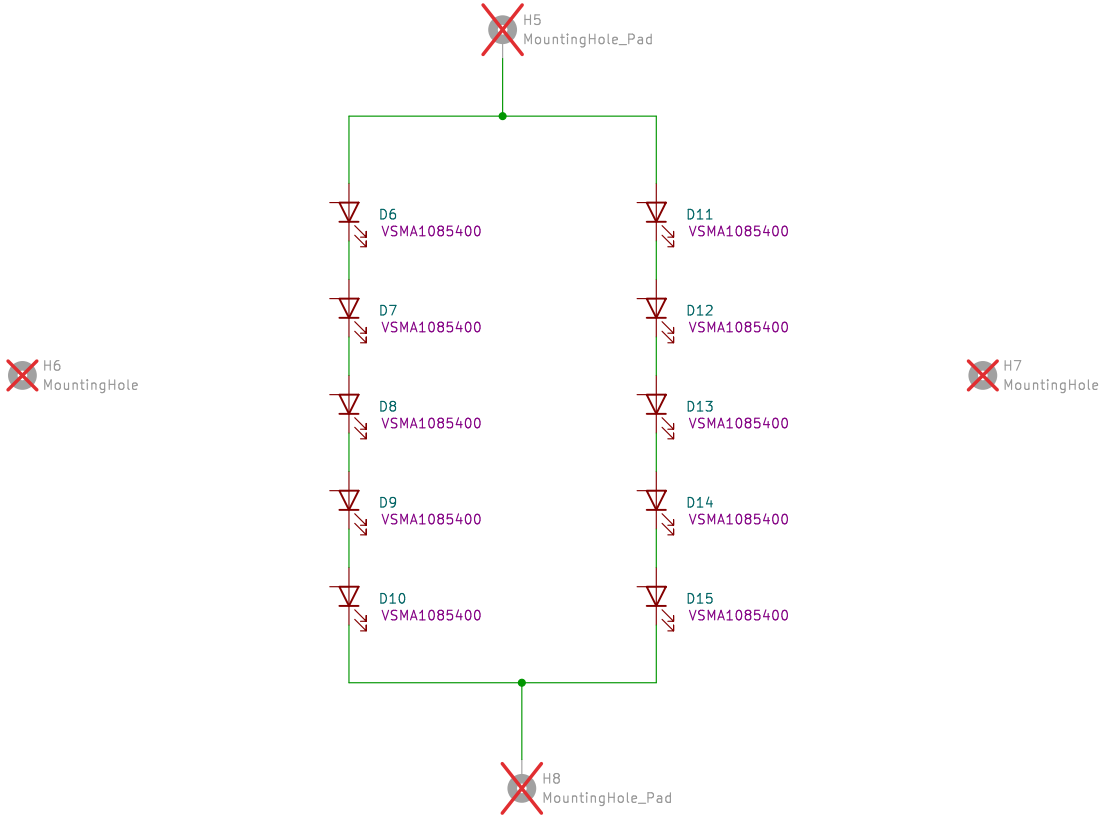

PiTrac

Sheet: /LED/
File: IRLED.kicad_sch

Title: V3 Connector + IRLED

Size: A4	Date: 2026-02-12	**Rev: V1**
KiCad E.D.A. 9.0.4		Id: 7/7